USER'S MANUAL

GPR378

GPR378 EXPLORDED DRAGRAM

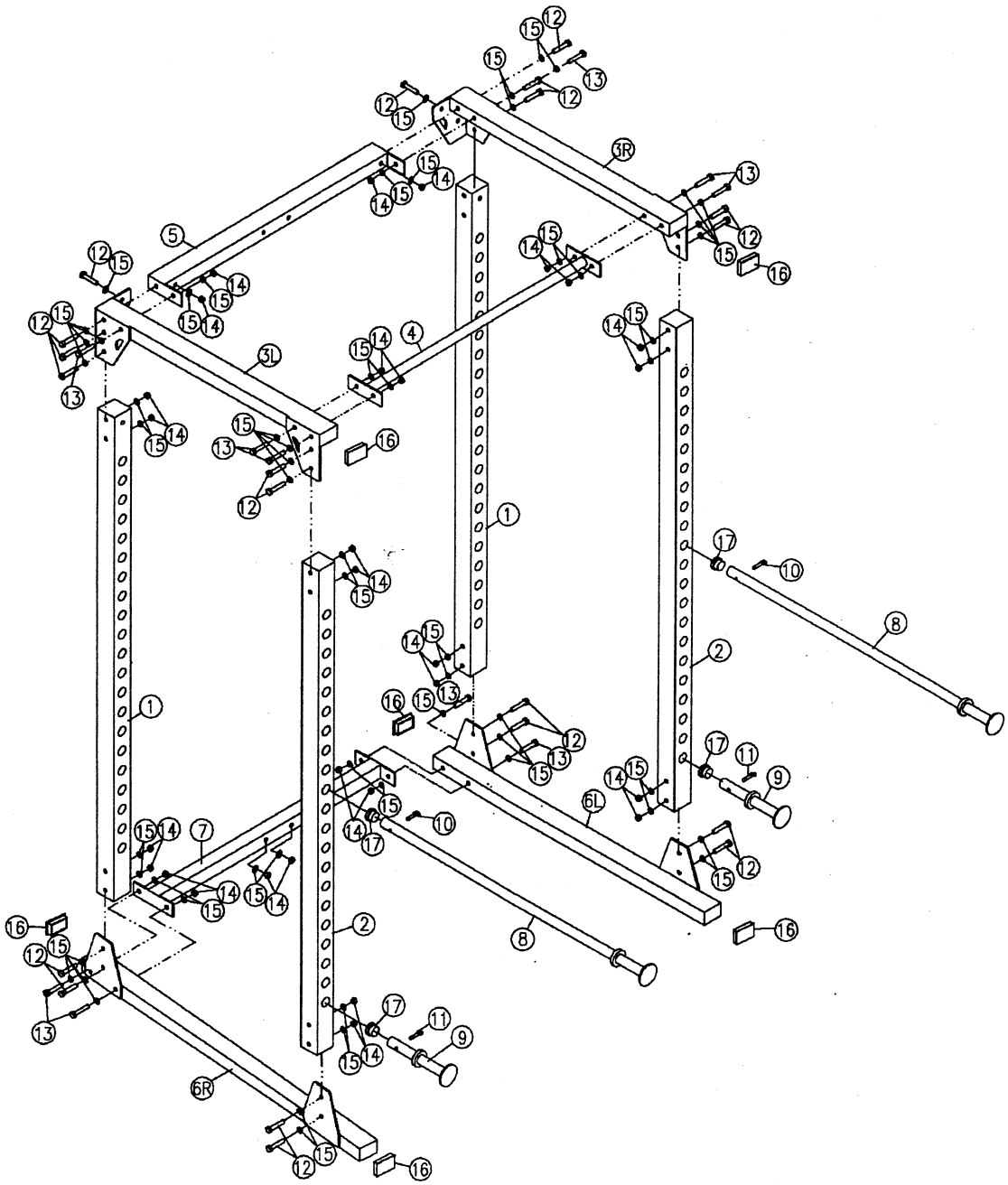

GPR378 PART LIST

NO.	NAMES	QTY.
1	BACK UPRIGHT	2
2	FRONT UPRIGHT	2
3	SIDE TOP FRAME	2
4	CHIN UP BAR	1
5	REAR TOP FRAME	1
6	SIDE BOTTOM FRAME	1
7	REAR BOTTOM FRAME	1
8	SAFETY CATCH	2
9	LIFT OFF	2
10	RING PIN 5/16"dia.×1 3/4" Length	2
11	RING PIN 3/8"dia.×1 3/4" Length	2
12	HEX HEAD BOLT 1/2"×4" PART.THR	20
13	HEX HEAD BOLT 1/2"×4 1/8" PART.THR	10
14	1/2"NYL0 N LOCK N UT	30
15	1/2" WASHER	60
16	END CAP 3"×2"	6
17	ROUND END CAP 1 1/4"dia.	4

STEP 1

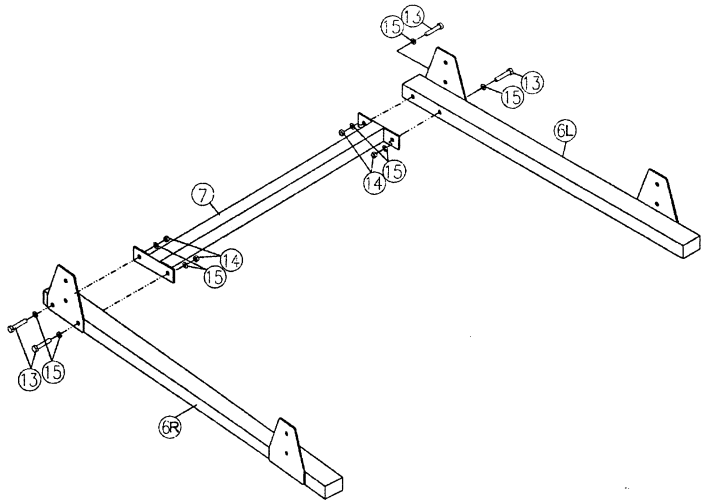

STEP 2

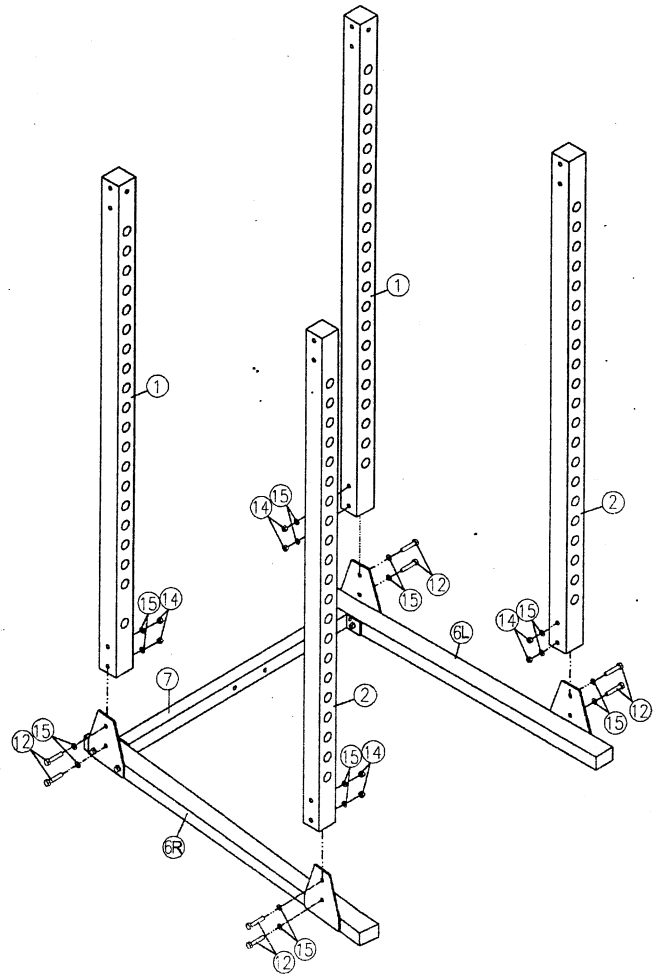

STEP 3

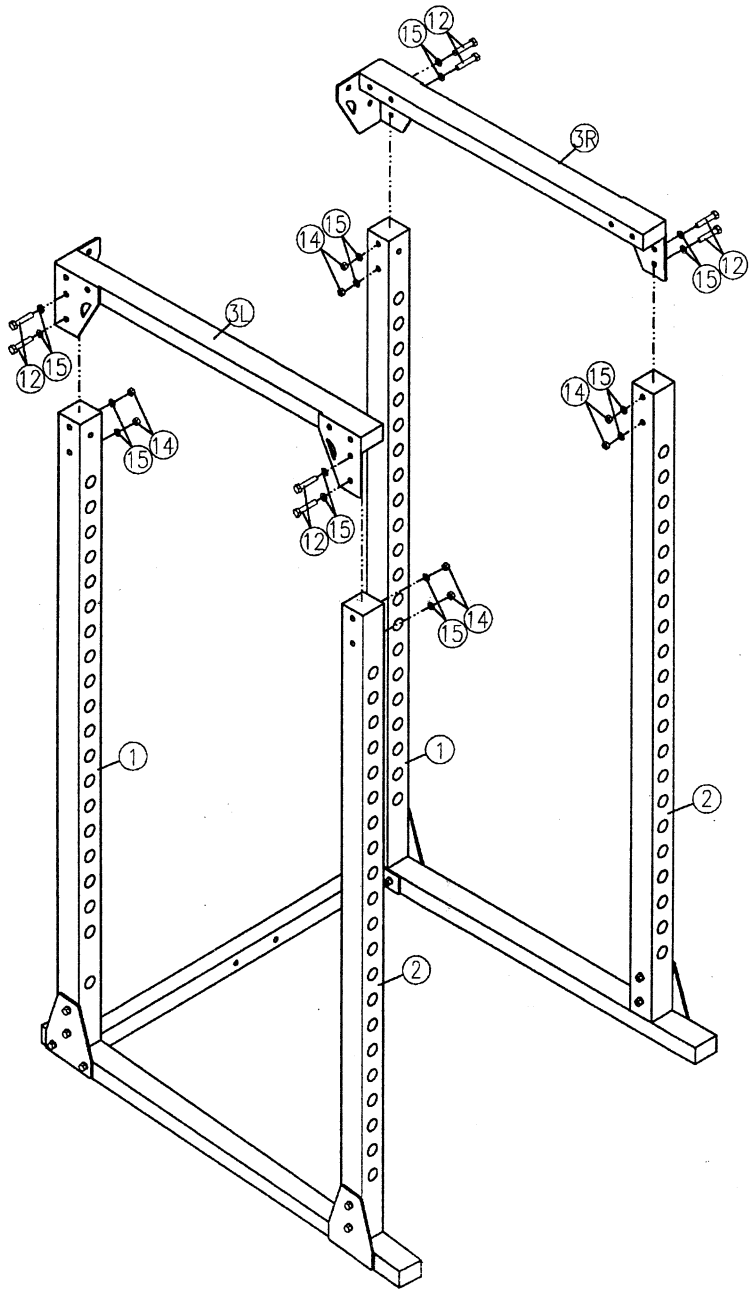

STEP 4

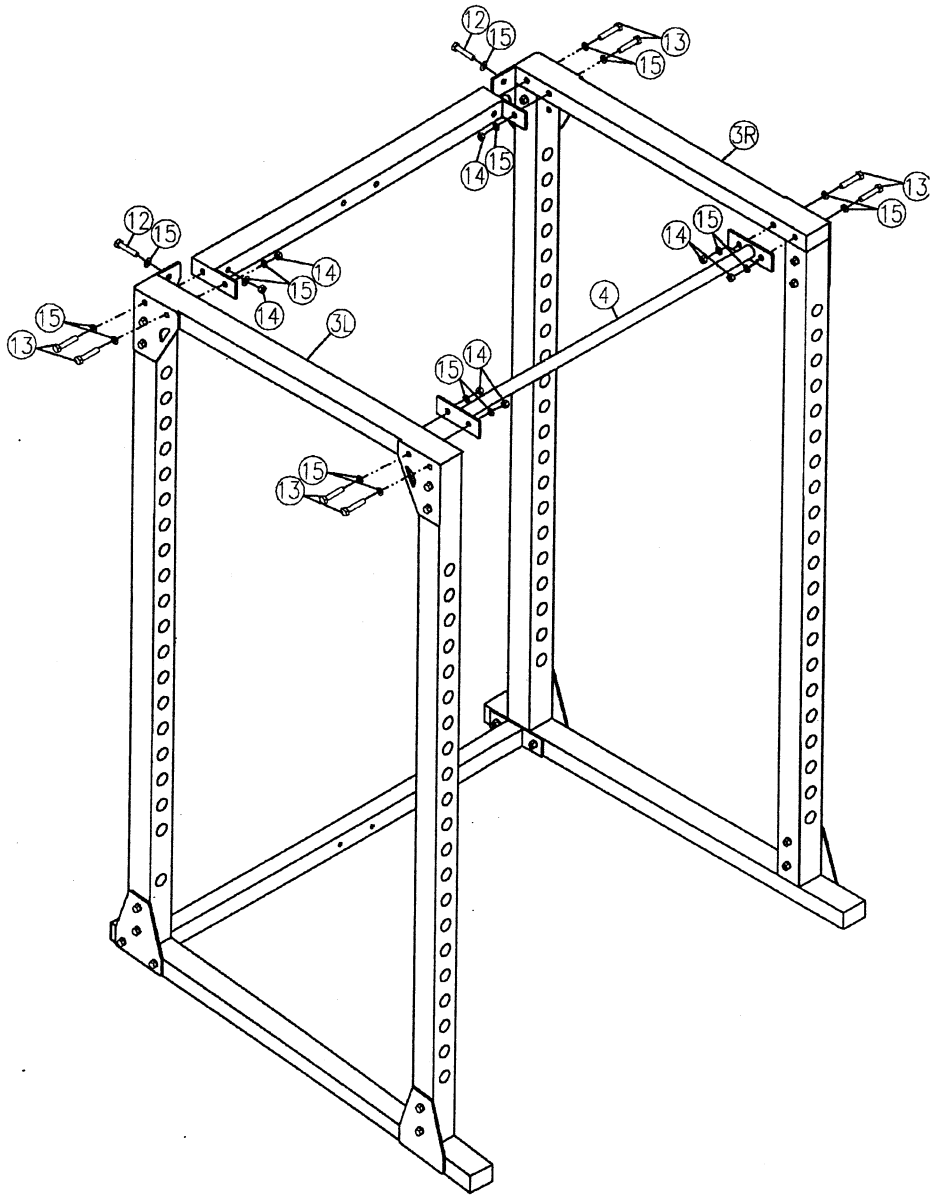
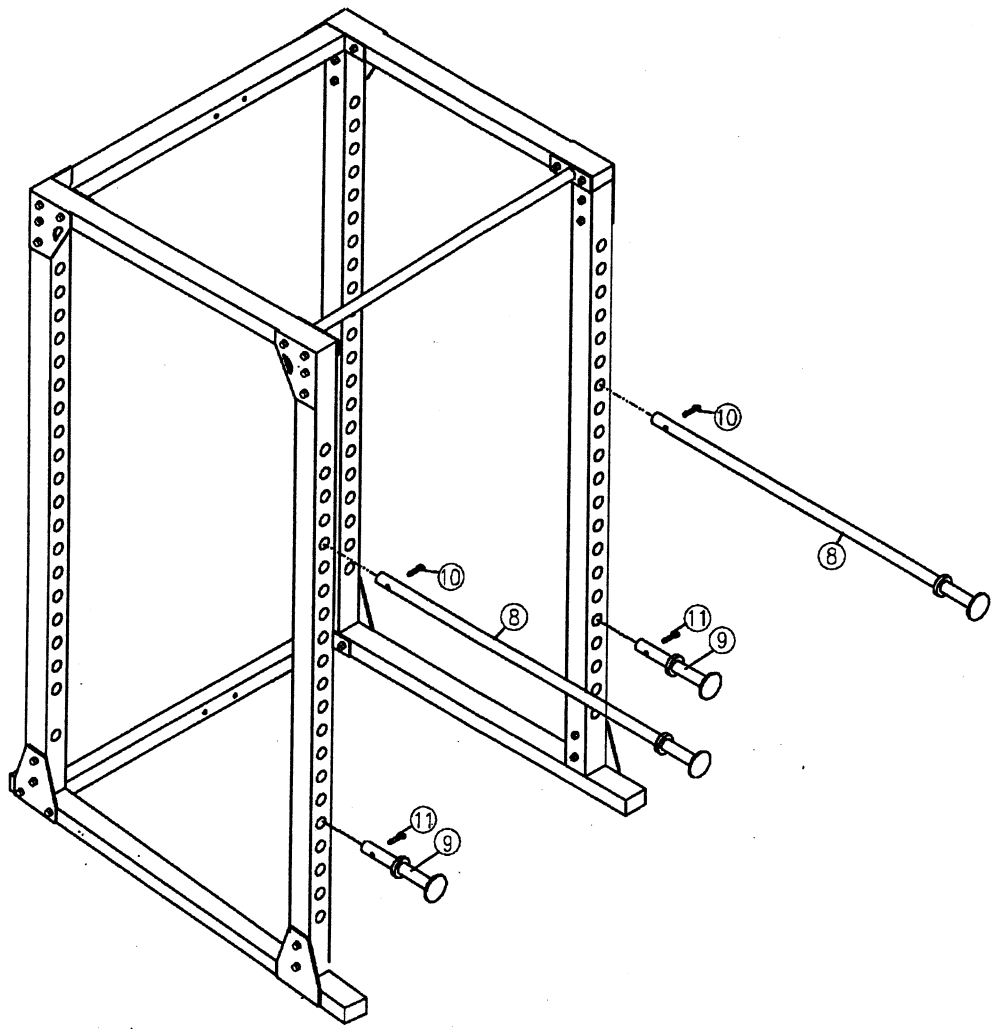
STEP 5